SITE PLAN

SCALE: 1" = 20'

DIGGERS HOTLINE

Diggers Hotline, Inc.
811 or 1-800-242-8511

LEGEND:

1) AM58P-6036-60RU-VIK – NODE CABINET
2) PLANNED TRANSPORT FIBER IN CONDUIT
3) 2" SERVICING ENTRANCE. GROUNDED BY ELECTRICIAN
4) #2 COPPER-TINNED GROUND WIRE 30" DEEP WITH FOUR CLAD GROUNDING RODS
5) CONCRETE PAD - 72" x 88" x 6"
6) 4" ENTRY TO NODE
7) 1(2 x10) ELECTRIC MOTION GROUND BAR
8) 1(4") DUCT WITH FIBER STUB TAIL FROM NODE (W/SWEEPS)
9) BA22 - STUB POLE FOR POWER PED
10) 1(2") DUCT FOR POWER CABLE
11) 1(2") DUCT FOR POWER CABLE TO NODE ENTRY
12) 2(4") VACANT DUCTS (W/SWEEPS)
13) POWER METER FOR POWER PED
14) AXS 900R HH - 39.3"Ø x 39.3"D
15) HEATER ATTACHMENT
16) POWER ATTACHMENT
17) STRONGWELL-QUAZITE HH - 17.5" x 10.5" x 12.75"
18) COATED GROUND WIRE

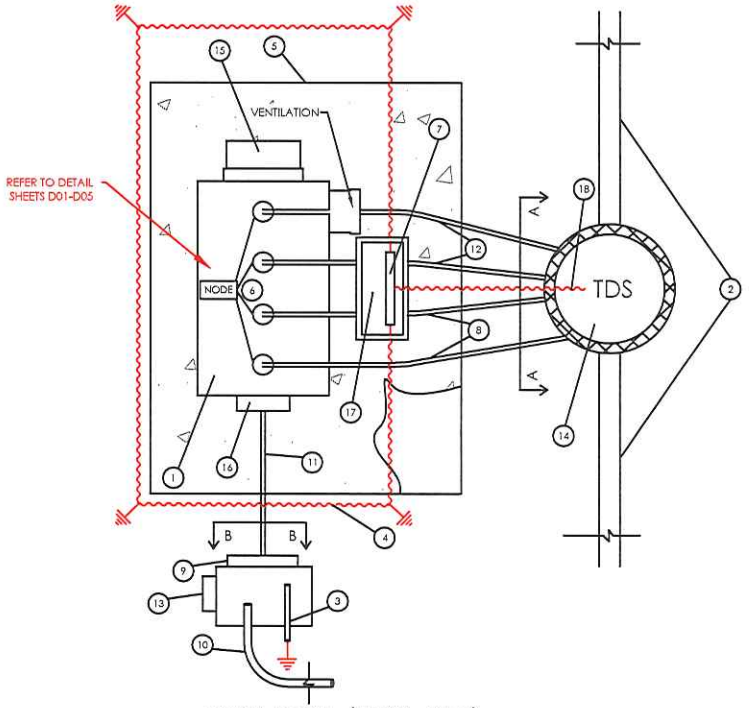

NODE DETAIL (AERIAL VIEW)

SCALE: NTS

APPLWI106_0872KE_0872106
APPLETON, WI

MATERIAL DESCRIPTION	QTY	ACTUAL
3" PVC SCH-40 CONDUIT	36'	
2" PVC SCH-40 CONDUIT	18'	

TDS

TILSON
On a Mission
T: (207) 591-6427 F: (207) 772-3427
Info@tilsontech.com

REVISIONS

DATE	DESCRIPTION	INITIAL
10/29/20	INITIAL SUBMISSION	AT

SCALE

SIZE B SHEET: N/A

SIZE D SHEET: N/A

SHEET C01 OF C02

FILE NAME: TDS_APPLWI106_01_NODE

APPLWI106_0872KE_09210S.dwg - PLOTTED C01 10/29/2020 2:37 PM

AM58P-6036-60RU-VIK

NOTE: 01

1- Both Quad Recep outlets are to be wired SEPERATE to 20amp breakers on RIGHT Side of Load Center, under generator breaker.

2- ADD 8-10" of slack from Quad Receps to J-Box; Per Customer Request.

3- Customer Request to leave LEFT Side of Load Center OPEN for 2-Pole Breakers for the Power Bay (we do NOT supply these breakers).

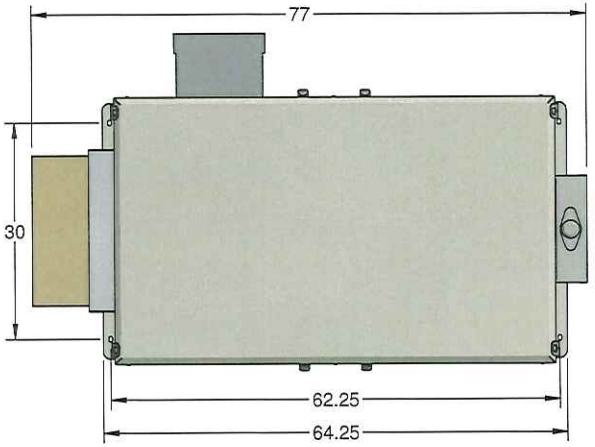

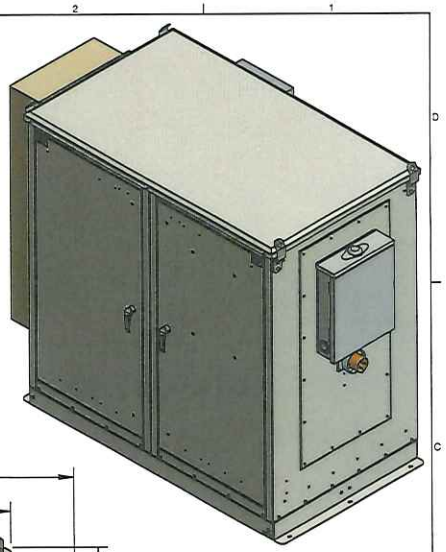

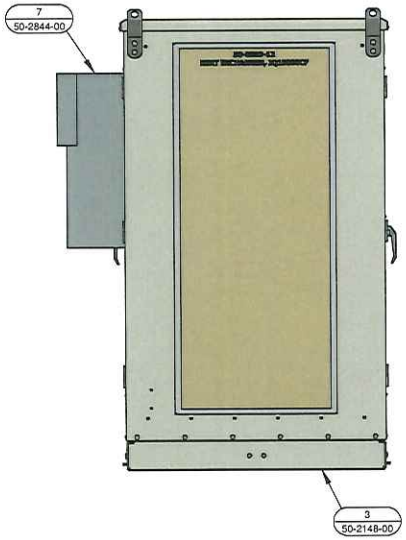

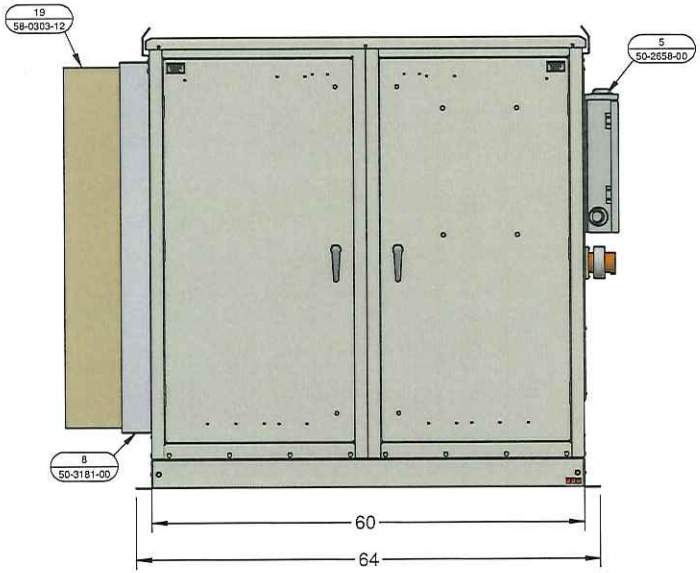

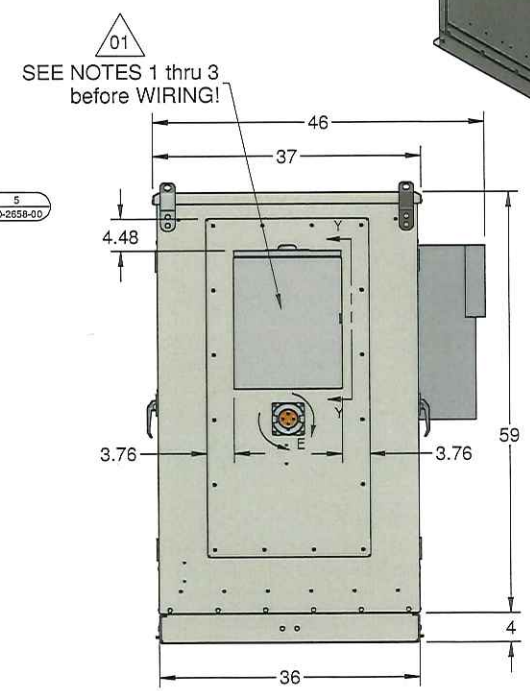

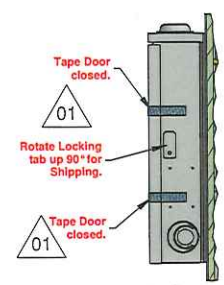

DETAIL AA

DETAIL E

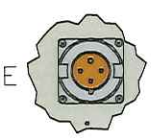

*REFERENCE PAINT SPEC SHEET FOR COLOR

REVISION HISTORY				
DCN NO.	REV	DESCRIPTION	DATE	APPROVED
E7742	01	Updated Per DR #6135	08/03/17	wrb
E7823	02	Chg'd battery tray to 50-3310-00 @ top	12/04/17	wrb

UNLESS OTHERWISE SPECIFIED
ALL DIMENSIONS ARE IN INCHES.
ALL TOLERANCES APPLY TO THE FINISHED PART, EXCLUDING PAINT

TOLERANCES: .X ± .1; .XX ± .1; .XXX ± .1
ANGLES: ± 1°; HOLES: ± .003"

THIS DRAWING IS THE EXCLUSIVE PROPERTY OF AMERICAN PRODUCTS LLC. ISSUED IN STRICT CONFIDENCE AND SHALL NOT BE REPRODUCED, COPIED OR USED FOR ANY PURPOSE WHATSOEVER, WITHOUT PRIOR WRITTEN PERMISSION.

MATERIAL:
FINISH:
DWN BY: WRB
CHK BY: TD
APR BY: TD
DATE: 12/11/2015
SCALE: NTS
SHEET 1 OF 5

AMERICAN PRODUCTS

TITLE: AM58P-6036-60RU-VIK
DRAWING NUMBER: 50-3180-00
REV: 02

CUSTOMER: WALKER